3600 LITRE TWO COMPARTMENT PRECAST SEPTIC TANK MODEL S3.6S

WILKINSON HEAVY PRECAST LIMITED
DUNDAS, ONTARIO 905-628-5611
www.wilkinsonheavyprecast.com

CONSTRUCTION DETAILS *

Concrete: 35 MPa at 28 Days, 5 to 8% Air Entrainment.

Reinforcing: 4 x 4 6/6 ww mesh in walls and partition.
10 M bars at 200 mm centres each way in top slab and floor.
Four extra 10 M bars around each roof access opening.
Minimum cover over reinforcing steel - 25 mm.

Weight:

Top Slab	945 kg
Tank Section	3500 kg
Total	4445 kg

Actual Capacity: 3125 Litres Per Vertical Metre.
4450 Litres to Underside of Roof Slab.
3810 Litres to Invert of Outlet.

NOTES

1. Standard access openings are 510 mm I. D. Poly Riser Rings 300 mm in height in two places. Each riser ring comes with a gasketed cover with two folding recessed 'T' handles. Optional 150 & 300 mm high grade rings can be added to suit grade elevation and meet the Ontario Building Code requirements 8.2.2.2 (10) and 8.6.2.1 (3).
2. Fibrous mastic sealant ensures a watertight seal.
3. Flexible watertight inlet/outlet pipe connector in each end wall accommodates 100 mm diameter PVC pipe.
4. Baffles are 100 mm PVC 'TY' fittings with drop leg. They are supplied loose and meant to be solvent welded by the contractor to the inlet and outlet pipes. The outlet baffle has an integral effluent filter rated at 3000 litres per day.
5. 150 mm diameter partition flow throughs in two places evenly spaced across the partition.
6. The partition is cast monolithically with the walls and floor.
7. Top slab lifting points four places.

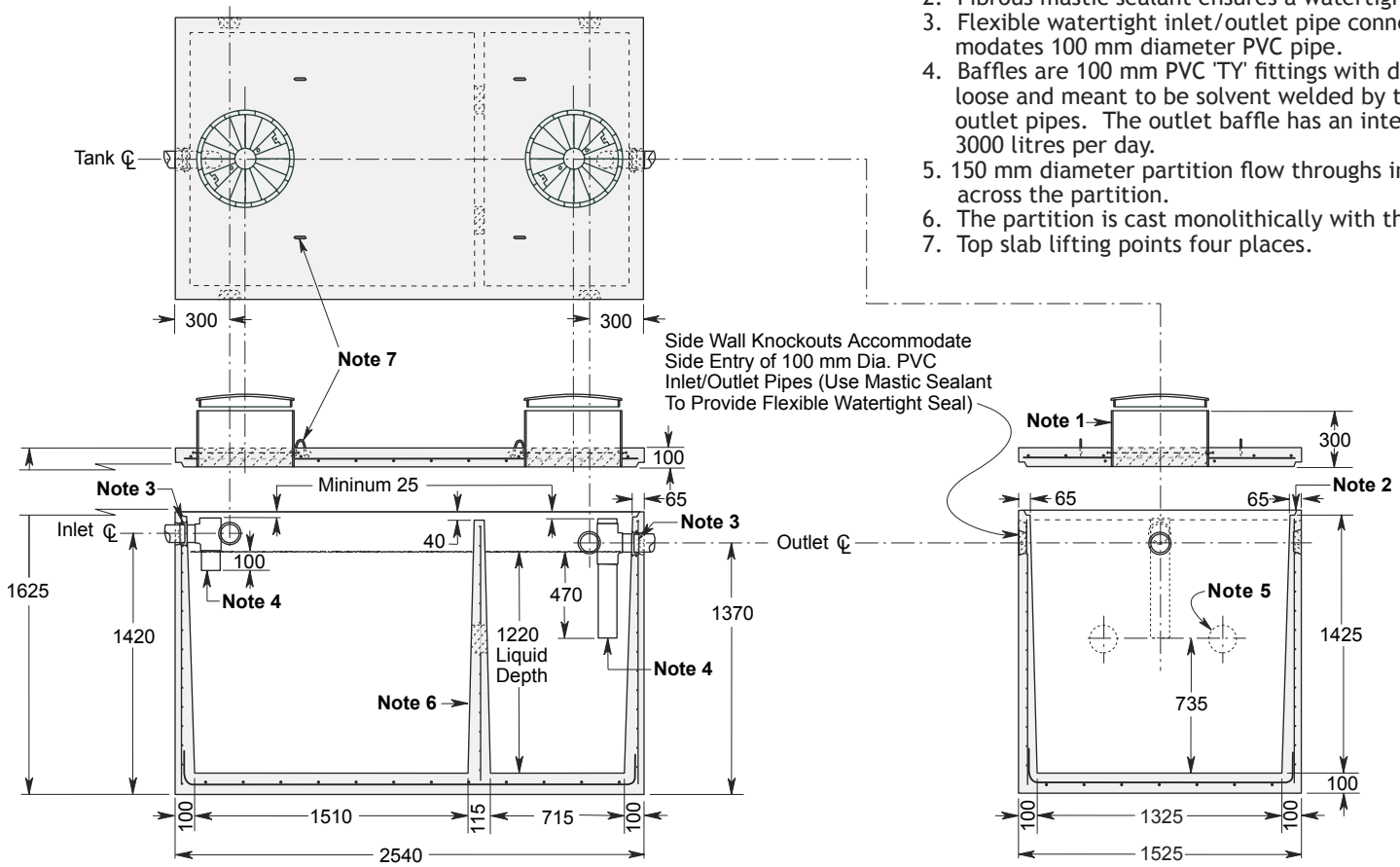

Dimensions in mm
N.T.S.

* Commensurate with a **1 Metre** burial over the top slab in firm soil away from any area of vehicular traffic.

For recommended installation procedures refer to Wilkinson Installation Guidelines.

WARNING ! IMPROPER INSTALLATION ESPECIALLY IN UNSTABLE SOILS CAN RESULT IN THE STRUCTURAL FAILURE OF THIS PRODUCT